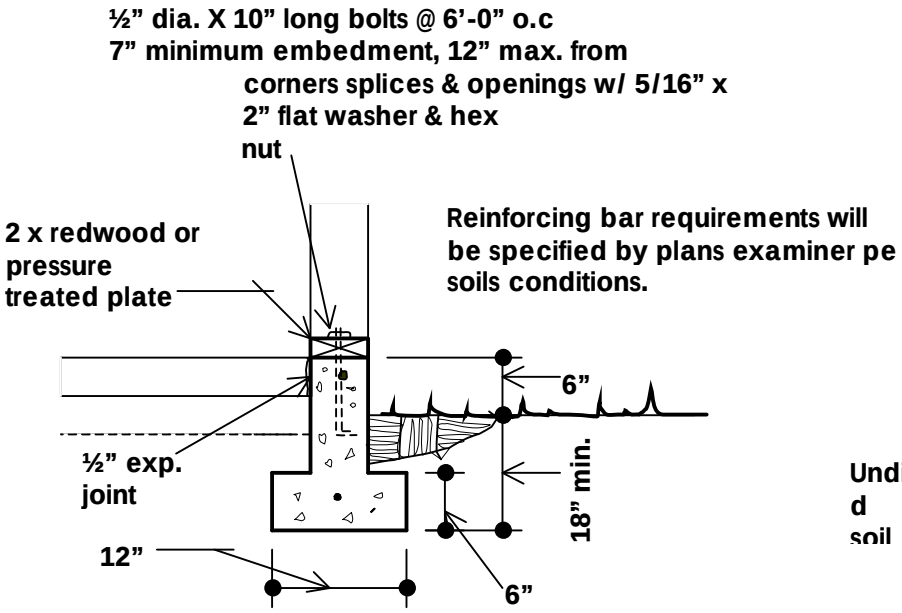

DETAIL A
(Stem Wall)

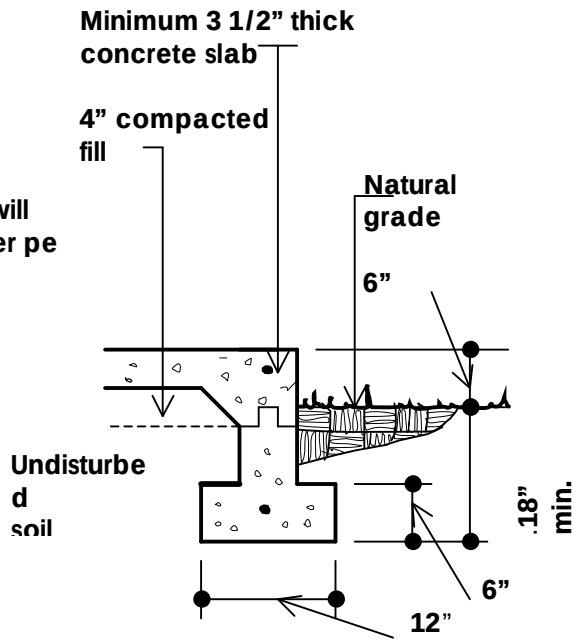

DETAIL B
(Depressed Stem @ Door)

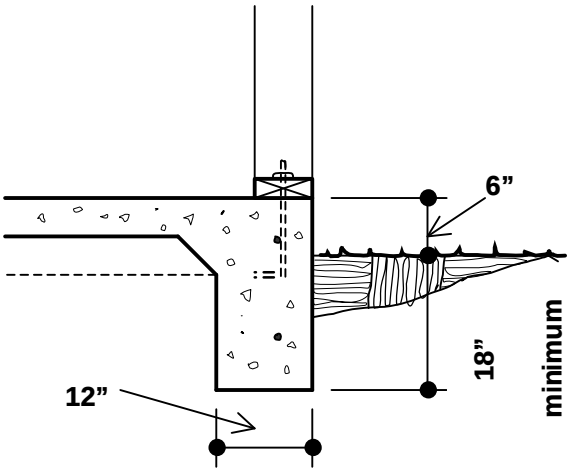

DETAIL C
(Monolithic)

Town of Gilbert 90 E. Civic Center Dr. Building and Code Compliance	**FOOTING DETAILS**	**TOG/007** Issued 06-00 Revision